IFUSP/P 622
B.I.F. - USP

UNIVERSIDADE DE SÃO PAULO

INSTITUTO DE FÍSICA
CAIXA POSTAL 20516
01498 - SÃO PAULO - SP
BRASIL

PUBLICAÇÕES

IFUSP/P-622

SCATTERING IN PARTICLE-HOLE SPACE: SIMPLE APPROXIMATIONS TO NUCLEAR RPA CALCULATIONS IN THE CONTINUUM

A.F.R. de Toledo Piza
Instituto de Física, Universidade de São Paulo

Janeiro/1987

SCATTERING IN PARTICLE-HOLE SPACE: SIMPLE APPROXIMATIONS TO NUCLEAR RPA CALCULATIONS IN THE CONTINUUM

A.F.R. de Toledo Piza

Instituto de Física, Universidade de São Paulo,
C.P. 20516, 01498 São Paulo, S.P., Brazil

ABSTRACT

The Random Phase Approximation (RPA) treatment of nuclear small amplitude vibrations including particle-hole continua is handled in terms of previously developed techniques to treat single-particle resonances in a reaction theoretical framework. A hierarchy of interpretable approximations is derived and a simple working approximation is proposed which involves a numerical effort no larger than that involved in standard, discrete RPA calculations.

1. INTRODUCTION

The random phase approximation (RPA), in one or another of its numerous guises, is the basic tool involved in the microscopic description of nuclear collective excitations which admit phenomenological characterization in terms of small amplitude vibrations. Proeminent among these are the giant resonances, involving a variety of multipolarities and degrees of freedom (e.g. surface, density, spin, isospin). Excitation energies place them typically above particle emmission thresholds, requiring eventually a reaction theoretical framework for their treatment. The inclusion of continuum effects in microscopic structure calculations has in fact been implemented several times, but always at the expense of considerable numerical effort[1,2].

This paper aims at exploring techniques which might allow for reliable treatment of continuum effects in particle-hole RPA type calculations at low cost. It is my purpose to argue that, on the basis of previously developed tools to handle single-particle resonances in complex nuclear reactions[3-6] (i.e., including direct, intermediate and compound processes), reliable approximation schemes can be set up that reduce the continuum RPA problem to the level of numerical complexity of the more standard, discrete calculations. Following a general formulation in section 2, these approximations are introduced

and discussed in section 3. Simple examples to illustrate some of the novel features in the calculations are treated in section 4, but a detailed numerical study of the approximations is deferred to a latter publication.

The schemes developed here can be eventually brought to bear on a much broader and richer description of reaction processes involving excitation or formation of particle-hole modes. Such a description, proposed by Kerman[7], allows in particular for the treatment of spreading widths, compound phenomena, fluctuation cross sections, etc.[8-10]. I will however refrain from involvement with these more substantial problems here, if only to bring enough emphasis on particularly simple ways of handling the particle-hole continuum. Further developments of the more general theory will be given elsewhere.

2. SCATTERING IN PARTICLE-HOLE SPACE

I will assume throughout this paper that everything which is of interest takes place within a restricted subspace, consisting of particle-hole excitations, of the entire phase space of the unclear system under consideration. Denoting as $|0\rangle$ the normalized ground state, I accordingly write relevant nuclear states $|\nu\rangle$ simply as

$$|\nu\rangle = \int dr_1' \int dr_2' \left(1 - |0\rangle\langle 0|\right) \psi^+(r_1')\psi(r_2')|0\rangle \, u_\nu(r_1' r_2') \equiv$$

$$\equiv \int dr_1' \int dr_2' \, |r_1' r_2'\rangle \, u_\nu(r_1' r_2') \tag{2.1}$$

The ψ^+, ψ are fermion field operators, and arguments and integrations are supposed to include (implicitly) both space and spin-isospin variables. The defined kets $|r_1' r_2'\rangle$ are in general not orthonormal, but conveniently represent the particle-hole subspace. The states $|\nu\rangle$, or equivalently their representatives $u_\nu(r_1' r_2')$, are to obey the projected stationary Schrödinger equation

$$\int dr_1' \int dr_2' \left[E_\nu (r_1 r_2 | r_1' r_2') - (r_1 r_2 | H | r_1' r_2')\right] u_\nu(r_1' r_2') = 0 \tag{2.2}$$

H being the nuclear Hamiltonian.

The general problem defined by eqs. (2.1) and (2.2) can be reduced to the standard RPA level of description by introducing further assumptions and approximations as follows. First, assume that the ground state is annihilated by the adjoint of the excitation operator appearing in eq. (2.1), i.e.

$$\int dr_1' \int dr_2' \, |r_2' r_1'\rangle \, u_\nu^*(r_1' r_2') = 0 \tag{2.3}$$

This assumption allows one to drop the $(1 - |0\rangle\langle 0|)$ projector in eq. (2.1). Furthermore, set the energy scale so that

$$H|0\rangle = 0 \quad .$$

Eq. (2.2) can thus be rewritten as

$$\int dr_1' \int dr_2' \Big[E_\nu \langle 0 | [\psi^+(r_2)\psi(r_1), \psi^+(r_1')\psi(r_2')] | 0 \rangle - \\ - \langle 0 | [\psi^+(r_2)\psi(r_1), [H, \psi^+(r_1')\psi(r_2')]] | 0 \rangle \Big] u_\nu(r_1' r_2') = 0 \qquad (2.4)$$

The usual (continuum) RPA equations now emerge when the ingredients of eq. (2.4) are evaluated in terms of the Hartree-Fock ground state as an approximation. Since nucleons can be promoted to states above nucleon-thresholds, eqs. (2.2) and (2.4) constitute in fact a scattering problem involving in general several coupled channels, and must therefore be supplemented by a set of appropriate scattering boundary conditions, such as e.g. an asymptotic plane (or Coulomb) wave in a given channel c and outgoing (or incomming) waves in all channels. The corresponding solutions are then denoted as $u_\nu^{(c)+}$ $(u_\nu^{(c)-})$.

Typical uses of these states are then as follows. First, they can be used to construct the RPA approximation to the particle-hole response function as[11]

$$(r_1 r_2 | R(\omega) | r_1' r_2') = \sum_c \oint_{E_\nu > 0} \Big[\frac{\langle 0 | \psi^+(r_2)\psi(r_1) | \nu^{(c)+} \rangle \langle \nu^{(c)+} | \psi^+(r_1')\psi(r_2') | 0 \rangle}{\hbar\omega - E_\nu + i\eta} - \\ - \frac{\langle 0 | \psi^+(r_1')\psi(r_2') | \nu^{(c)+} \rangle \langle \nu^{(c)+} | \psi^+(r_2)\psi(r_1) | 0 \rangle}{\hbar\omega + E_\nu + i\eta} \Big] \qquad (2.5)$$

where the particle-hole transition amplitudes are given as

$$\langle 0 | \psi^+(r_2)\psi(r_1) | \nu^{(c)+} \rangle = \int dr_2' \, u_\nu^{(c)+}(r_1 r_2') \rho(r_2' r_2) - \\ - \int dr_1' \, \rho(r_1 r_1') u_\nu^{(c)+}(r_1' r_2) \, . \qquad (2.6)$$

Second, one may treat within the same approximation direct reaction processes of the type

$$a + |0\rangle \longrightarrow a' + |\nu\rangle \\ \hookrightarrow |f\rangle + c \qquad (2.7)$$

in which a particle-hole mode is directly excited by inelastic scattering of some probe a (e.g. inelastic electron scattering) and sequentially decays through one of the open channels c, leaving a residual state $|f\rangle$. If then the inelastic scattering process is dealt with in term of the Born approximation (possibly

with appropriately distorted waves), the transition amplitude corresponding to (2.7) is[9]

$$T_c = \langle \nu^{(c)-} | M_{aa'} | 0 \rangle \tag{2.8}$$

where $M_{aa'}$ is a one-body operator acting on $|0\rangle$ which depends on the nature of the particular direct interaction which has taken place. The assumptions made above on the structure of the excited state $|\nu\rangle$ are certainly too stringent if a realistic description of the sequential decay of collective excitations based on particle-hole excitations is sought. As was noted, this shortcomming can be eliminated by allowing for the participation of other degrees of freedom in the reaction theoretical formulation. This will not be pursued here.

3. RESONANCE-HOLE STATES PLUS BACKGROUND

Rather than tackling directly, once again, the problem of finding solutions to eq. (2.4) in terms of some technique[1] or representation[2], I will in this section first analyse the physics involved there in terms of a number of coupled but distinct processes, in the expectation that the relevant part of the particle-hole amplitude $u(r_1 r_2)$ for eqs. (2.5) or (2.8) can be substantially circumscribed. The

way to get hold of these processes is first to split the particle-hole phase-space (spanned by the state vectors $|r_1 r_2)$) in two orthogonal parts according to

$$|r_1 r_2) \equiv \sum_{\lambda\mu} |\lambda\mu) a_{\lambda\mu}(r_1 r_2) + p|r_1 r_2) \equiv$$
$$\equiv R|r_1 r_2) + p|r_1 r_2) \tag{3.1}$$

where R and p are orthogonal projection operators, so that, in particular, $p|\lambda\mu) = 0$. The main content of the decomposition (3.1) then hinges on the specificiation of the discrete set of state vectors $|\lambda\mu)$ spanning the R subspace. This is done as follows.

Previous experience with the calculation of transition amplitudes for complex nuclear reactions involving the participation of single particle resonances has demonstrated that the latter can be profitably analysed in terms of a normalized state, which contains the essential behavior of the resonant wavefunction inside the nucleus, coupled to a continuous spectrum of single particle scattering eigenstates which will be referred to as the background. These are scattering solutions of the one-body Schrödinger equation projected onto the orthogonal subspace to the selected normalized state[3,4]. The energy dependence of the corresponding phase-shifts is smooth, in the sense of lacking the resonant behavior; and the amplitude of the

associated radial wavefunctions in the internal region is strongly reduced. This at once suggests that, for the problem at hand, the discrete states $|\lambda\mu)$ be chosen as the resonance-hole states

$$|\lambda\mu) = \int dr_1 \int dr_2 \left(1 - |0\rangle\langle 0|\right) v_\lambda(r_1)\, v_\mu^*(r_2)\, \psi^+(r_1)\, \psi(r_2)\, |0\rangle \tag{3.2}$$

where $v_\mu(r)$ stands for a single-particle occupied state in $|0\rangle$ and $v_\lambda(r_1)$ are normalized single-particle states corresponding to bound unoccupied single-particle states <u>or</u> to states containing the essential behavior of the relevant single-particle resonances inside the nucleus in the same sense as above. With this choice, given the fact that relevant two-body matrix elements will necessarily contain hole states and will therefore be sensitive to the behavior of $u(r_1 r_2)$ inside the nucleus, one may expect that contributions related to the p component (see eq. (3.1)) be of minor importance when evaluating eqs. (2.5) or (2.8).

In order to streamline the notation I now rewrite eq. (2.2) simply as

$$\left[E_\nu - H\right]|\nu\rangle = 0 \tag{3.3}$$

and, using $|\nu\rangle = R|\nu\rangle + p|\nu\rangle$, cast it in the form of the coupled equations

$$\begin{aligned} \left[E_\nu - H_{RR}\right] R|\nu\rangle &= H_{Rp}\, p|\nu\rangle \\ \left[E_\nu - H_{pp}\right] p|\nu\rangle &= H_{pR}\, R|\nu\rangle . \end{aligned} \tag{3.4}$$

Formal solutions of the second equation are

$$p|\nu\rangle = |\chi_c^+\rangle + \frac{1}{E_\nu^+ - H_{pp}} H_{pR}\, R|\nu\rangle \tag{3.5}$$

which, substituted back in the first equation, yield

$$\left[E_\nu - H_{RR} - H_{Rp} \frac{1}{E_\nu^+ - H_{pp}} H_{pR}\right] R|\nu\rangle = H_{Rp}\, |\chi_c^+\rangle . \tag{3.6}$$

The state $|\chi_c^+\rangle$ is a scattering solution of

$$\left[E_\nu - H_{pp}\right]|\chi_c^+\rangle = 0 , \tag{3.7}$$

with the subscript c denoting the incident channel. Since eq. (3.6) involves the complex effective hamiltonian

$$\mathcal{H}_{RR} = H_{RR} + H_{Rp} \frac{1}{E^+ - H_{pp}} H_{pR} \tag{3.8}$$

in the discrete resonance-hole subspace, the component $R|\nu\rangle$ can be written in terms of the biorthogonal set of states $|R_n\rangle$, $|\tilde{R}_n\rangle$ satisfying[12]

$$[\epsilon_n - \mathcal{H}_{RR}]|R_n\rangle = 0 \; ; \quad [\epsilon_n^* - \mathcal{H}_{RR}^+]|\tilde{R}_n\rangle = 0 \; ;$$
$$\langle \tilde{R}_{n'} | R_n \rangle = \delta_{nn'} \tag{3.9}$$

as

$$R|\nu\rangle = \sum_n \frac{|R_n\rangle\langle\tilde{R}_n|H|\chi_c^+\rangle}{E - \epsilon_n} \tag{3.10}$$

which, together with eq. (3.5), completes the formal solution of eq. (3.3).

The physical content of the various pieces of this solution can now be analysed as follows. First, the background continuum component $|\chi_c^+\rangle$ corresponds in general to the projected coupled channels problem (3.7). The channels correspond to the various allowed hole states associated with an unbound particle. That component will thus in general contain all of the allowed hole states. To the extent that the unbound particle does not significantly leak into the nuclear volume, the dominant hole will be the one associated with the incident channel, and ignoring channel coupling may be useful as an approximation (see fig. 1). The second term of eq. (3.5), on the other hand, can be viewed as a virtual leakage to the background continuum of the flux trapped in resonance-hole subspace (cf. ref. (6)). This term contains, in particular, the coupling H_{pR} between the resonance-hole space and the

background continuum. As indicated in the various possible contributions shown in fig. 2, this coupling takes place either through a (dominant) one-body ("mean field") mechanism[5] or through a particle-hole (two-body) interaction. Finally, the interaction between the resonance-hole and the background continuum subspaces also gives rise to the complex, energy dependent effective interaction within the resonance-hole subspace appearing in the second term on the right hand side of eq. (3.8). This term can be analysed in terms of the several contributions shown in fig. 3, which involve diverse contributions of one-body or two-body couplings, and elastic scattering or channel coupling contributions within the p-space.

3.1. APPROXIMATION SCHEME

On the basis of the preceding analysis a simple approximation to the evaluation of eqs. (2.5) or (2.8) suggests itself, to which a number of corrections can furthermore be devised and calculated if needed. For definiteness, I will refer to eq. (2.5) in what follows.

The approximation consists, first, in neglecting the background component (3.5) when evaluating the transition amplitudes $\langle 0|\psi^+(r_2)\psi(r_1)|\nu^{(c)+}\rangle$. This is based on the fact that the amplitude associated with the background particle is small inside the nucleus. Second, when obtaining the resonance-

hole amplitudes $|R_n\rangle$, $|\tilde{R}_n\rangle$ (see eq. (3.10)), the first contribution in fig. 3 should dominate, and constitutes the minimal addition to the dynamical ingredients contained in the H_{RR} term of eq. (3.8). This contribution, in fact, takes into account the (one-body) coupling of the resonance to the background continuum, giving rise to the dominant contribution to the particle escape width.

It is perhaps worthwhile to enlarge somewhat on this last point. The second term on the right of eq. (3.8) admits the spectral representation

$$RH\frac{P}{E^+-H_{pp}}HR=\sum_c\int d\epsilon\ \frac{RH|\chi_c^+(\epsilon)\rangle\langle\chi_c^+(\epsilon)|HR}{E^+-\epsilon}$$

where the continuum eigenstates of H_{pp} are delta-function normalized in energy. This expression, which involves all the contributions illustrated in fig. 3, can be splitt into a hermitean part, given as the singular integral evaluated with the principal value prescription at $\epsilon = E$, and an anti-hermitean delta-function part

$$-i\pi\sum_c RH|\chi_c^+(E)\rangle\langle\chi_c^+(E)|HR.$$

Ignoring both channel coupling effects built into $|\chi_c^+\rangle$ and particle-hole interactions in H_{Rp} this expression reduces

in fact to the single-particle escape width of the resonant particle for the appropriate value of the energy E. This is clearly an energy dependent quantity as usual in this approach, but it is also such that its energy dependence is slow on the energy scale of the width itself[4-6]. In this way, retaining just the first contribution in fig. 3 ammounts to effectively replacing real by complex particle-hole energies in the otherwise discrete nuclear structure problem formulated in eqs. (3.9). The imaginary parts are then just the single-particle resonance escape widths.

In terms of the solutions of this problem the basic approximation consists thus in writing

$$\langle 0|\psi^+(r_2)\psi(r_1)|V^{(c)+}\rangle \approx \sum_n \frac{\langle 0|\psi^+(r_2)\psi(r_1)|R_n\rangle\langle\tilde{R}_n|H|\chi_c^+(E)\rangle}{E-\epsilon_n}. \quad (3.11)$$

This contains the transition densities associated with the complex states $|R_n\rangle$ weighted with (complex) pole amplitudes. The matrix elements $\langle\tilde{R}_n|H|\chi_c^+(E)\rangle$ are themselves related to the escape amplitudes of the complex nuclear structure eigenstates. Within the adopted approximations, they involve just the first contribution shown in fig. 2 and thus, given the result of the structure calculation, reduce to linear combinations of the various resonance-hole width amplitudes.

Finally, it is worth stressing that the techniques

to actually evaluate the continuum amplitudes involved here have been used before in different though related contexts. They involve nothing but simple modifications of standard potential scattering calculations for given partial waves and are reviewed for completeness in the Appendix. Processes like those involved in higher contributions shown in figs. 2 and 3 have also been evaluated before, so that an actual check of their quantitative importance is within reach. The nuclear structure problem, as formulated in eq. (3.9), on the other hand, involves no more than a complex extention of real, but already non-hermitean, RPA calculations in a discrete particle-hole space.

4. COMPLEX PARTICLE(RESONANCE)-HOLE MODES

Restricting oneself to the basic approximation discussed in section 3.1 implies having to solve the complex eigenvalue problem of eq. (3.9), in which the complex, energy dependent part of the effective hamiltonian $\mathcal{H}_{RR}$ (eq. (3.8)) is approximated by just the first contribution shown in fig. 3. The further reduction of this problem to the standard RPA form is straightforward. Since the relevant phase-space is discrete, it is convenient to represent it in terms of tne discrete set of states $|\alpha\beta)$ defined as

$$|\alpha\beta) = (1-|0\rangle\langle 0|)\, a_\alpha^+ a_\beta |0\rangle \tag{4.1}$$

where $|0\rangle$ is the ground-state, and the a_α^+, a_α are fermion creation and annihilation operators associated with the relevant bound or normalized resonance orbitals α. Thus (cf. eq. (2.1))

$$|R_n\rangle = \sum_{\alpha\beta} R^{(n)}_{\alpha\beta}\, |\alpha\beta) \equiv (1-|0\rangle\langle 0|)\, B_n^+ |0\rangle . \tag{4.2}$$

A similar expansion can of course be written for adjoint states $|\tilde{R}_n\rangle$.

The subsequent steps are identical to those involved in the reduction of eq. (2.2) to the form (2.4): require that the ground-state $|0\rangle$ is annihilated by the adjoint B_n of the excitation operator B_n^+ defined in eq. (4.2); set the energy scale so that $H|0\rangle = 0$. This yields

$$\sum_{\gamma\delta} \Big\{ \epsilon_n \langle 0|[a_\beta^+ a_\alpha, a_\gamma^+ a_\delta]|0\rangle - \langle 0|[a_\beta^+ a_\alpha, [\mathcal{H}_{RR}, a_\gamma^+ a_\delta]]|0\rangle \Big\} R^{(n)}_{\gamma\delta} = 0 \tag{4.3}$$

which is to be evaluated by using the Hartree-Fock ground state as an approximation to $|0\rangle$.

Appart from the complex, energy dependent part of $\mathcal{H}_{RR}$, eq. (4.3) can be cast into the usual RPA form

$$\epsilon_n G R^{(n)} = \mathcal{E} G R^{(n)} + G M G R^{(n)} \tag{4.4}$$

where $R^{(n)}$ stands for the column vector formed with the components $R^{(n)}_{\gamma\delta}$ and

$$G_{\alpha\beta;\gamma\delta} = (p_\beta - p_\alpha)\,\delta_{\alpha\gamma}\,\delta_{\beta\delta} \quad ; \tag{4.5}$$

$$\mathcal{E}_{\alpha\beta;\gamma\delta} = (\epsilon_\alpha - \epsilon_\beta)\,\delta_{\alpha\gamma}\,\delta_{\beta\delta} \quad , \tag{4.6}$$

and

$$M_{\alpha\beta;\gamma\delta} = \langle \alpha\delta | \tilde{v} | \beta\gamma \rangle \, . \tag{4.7}$$

Here p_α denotes the occupation number (1 or 0) associated with the orbital α, ϵ_α is the corresponding Hartree-Fock-like single particle energy and the bracket is the antisymmetrized two-body matrix element of the residual two-body force. To the approximation proposed here, the remaining term of $\mathcal{H}_{RR}$ just adds energy dependent shifts and escape widths (for unbound states) to the real single-particle energies ϵ_α. The structure of eq. (4.4), and in particular the diagonal character of $\mathcal{E}$, eq. (4.6), remains therefore unchanged except for the now complex (non-hermitean) nature of $\mathcal{E}$. Furthermore, the smooth energy dependence which comes from coupling to the background continuum (p-space) can be neglected within energy intervals of the order of the widths, so that eq. (4.4) eventually amounts to a standard, discrete RPA problem with complex single-particle energies. Taking into account that the matrices G and $\mathcal{E}$

commute (they are simultaneously diagonal), together with the hermiticity of G and M, the adjoint problem defining the states $\tilde{R}^{(n)}$ are solutions of

$$\epsilon_n^* G \tilde{R}^{(n)} = \mathcal{E}^+ G \tilde{R}^{(n)} + G M G \tilde{R}^{(n)} \, . \tag{4.8}$$

4.1. SIMPLE ANALYTICAL EXAMPLES

Some salient features of the complex modes $R^{(n)}$, $\tilde{R}^{(n)}$ are usefully illustrated in situations involving matrices of small dimensionality, which allow in particular for simple analytical solutions of eqs. (4.4) and (4.8). The simplest case is that involving one single resonance-hole pair, for which the RPA matrices are two by two matrices (fig. 4). Eq. (4.4) becomes in this case

$$\epsilon \begin{pmatrix} R_{12} \\ R_{21} \end{pmatrix} = \begin{pmatrix} \epsilon_2 - \epsilon_1 + \langle 21|\tilde{v}|12\rangle & \langle 22|\tilde{v}|11\rangle \\ -\langle 11|\tilde{v}|22\rangle & -\epsilon_2 + \epsilon_1 - \langle 12|\tilde{v}|21\rangle \end{pmatrix} \begin{pmatrix} R_{12} \\ R_{21} \end{pmatrix} \equiv$$

$$\equiv \begin{pmatrix} \eta & B \\ -B^* & -\eta \end{pmatrix} \begin{pmatrix} R_{12} \\ R_{21} \end{pmatrix}$$

so that the complex eigenvalues are given as

$$\epsilon_{\pm} = \pm\sqrt{\eta^2 - |B|^2}\,. \tag{4.9}$$

Appart from normalization the corresponding eigenvectors are

$$R_{12}^{(+)} = 1 \;;\quad R_{21}^{(+)} = \frac{\sqrt{\eta^2 - |B|^2} - \eta}{B} \tag{4.10}$$

and

$$R_{12}^{(-)} = -\frac{B}{\eta + \sqrt{\eta^2 - |B|^2}} \;;\quad R_{21}^{(-)} = 1\,. \tag{4.11}$$

The adjoint problem, on the other hand, reads

$$\epsilon^* \begin{pmatrix} \tilde{R}_{12} \\ \tilde{R}_{21} \end{pmatrix} = \begin{pmatrix} \eta^* & -B \\ B^* & -\eta^* \end{pmatrix} \begin{pmatrix} \tilde{R}_{12} \\ \tilde{R}_{21} \end{pmatrix}$$

which leads to the complex-conjugate of eq. (4.9) and

$$\tilde{R}_{12}^{(+)} = 1 \;;\quad \tilde{R}_{21}^{(+)} = -\frac{\sqrt{\eta^{*2} - |B|^2} - \eta^*}{B} \;; \tag{4.12}$$

$$\tilde{R}_{12}^{(-)} = \frac{B}{\eta^* + \sqrt{\eta^{*2} - |B|^2}} \;;\quad \tilde{R}_{21}^{(-)} = 1\,. \tag{4.13}$$

These eigenvectors explicitely satisfy the orthogonality relations, eq. (3.9). As for normalization, one finds

$$\langle \tilde{R}^{(+)} | R^{(+)} \rangle = 1 - \frac{\left(\sqrt{\eta^2 - |B|^2} - \eta\right)^2}{|B|^2} \;;\quad \langle \tilde{R}^{(-)} | R^{(-)} \rangle = 1 - \frac{|B|^2}{\left(\sqrt{\eta^2 - |B|^2} + \eta\right)^2}$$

which are in general <u>complex</u> quantities. This implies that the normalization condition (3.9) constrains the relative phasing of $|R^{(\pm)}\rangle$ and the corresponding adjoint vectors $|\tilde{R}^{(\pm)}\rangle$. In order to make contact with the usual RPA results (real η), write the adjoint vectors as

$$|\tilde{R}^{(\pm)}\rangle = G\,|R^{(\pm)}\rangle\,,$$

G being given by eq. (4.5). Referring directly to the eigenvector components, one finds that, for real η,

$$|R^{(\pm)}\rangle = \pm\,|R^{(\pm)}\rangle$$

so that, in this case

$$|\tilde{R}^{(\pm)}\rangle = \pm\,G\,|R^{(\pm)}\rangle\,.$$

The minus sign corresponds to the familiar "negative norm" of the negative energy state, but can also be interpreted in terms of the appropriate relative phasing of $|R^{(\pm)}\rangle$ and of $|\tilde{R}^{(\pm)}\rangle$ in this case.

Given the properly normalized and phased complex

eigenstates it is straightforward to write the sought approximation e.g. to the response function, eq. (2.5), by using eqs. (3.10) and (3.11). Note that, for the particular case in hand, each of the two terms in eq. (2.5) will in turn contain four terms as originated from a double sum over complex modes. Furthermore, cross terms in this double sum will depend crucially on the relative phasing of the adjoint pairs of states.

A second example which can be trivially worked out is that which involves two particle (resonance)-hole states, backward matrix elements being neglected, so that the RPA reduces to the Tamm-Dancoff Approximation. In this case one is led to a secular determinant of the form

$$\begin{vmatrix} \Delta_1 - \epsilon & A \\ A^* & \Delta_2 - \epsilon \end{vmatrix} = 0$$

with Δ_1 and Δ_2 complex, in general. This leads to the complex eigenvalues

$$\epsilon_\pm = \frac{1}{2}\left[\Delta_1 + \Delta_2 \pm \sqrt{(\Delta_1 - \Delta_2)^2 + 4|A|^2} \right]$$

and to the (non-normalized) eigenvectors

$$R_1^+ = 1 \quad ; \quad R_2^+ = \frac{\epsilon_+ - \Delta_1}{A} \quad ;$$

$$R_1^- = 1 \quad ; \quad R_2^- = \frac{A}{\epsilon_- - \Delta_1} \quad .$$

The adjoint vectors can be likewise found as

$$\tilde{R}_1^+ = 1 \quad ; \quad \tilde{R}_2^+ = \frac{\epsilon_+^* - \Delta_1^*}{A}$$

$$\tilde{R}_1^- = 1 \quad ; \quad \tilde{R}_2^- = \frac{A}{\epsilon_-^* - \Delta_1^*} \quad .$$

Again orthogonality properties can be explicitely checked and normalization implies correct relative phasing of adjoint pairs. The limiting case of real Δ_1 and Δ_2 is entirely transparent.

5. CONCLUSION

I have proposed an approach to the treatment of small amplitude vibrations occurring above particle emission thresholds in terms of the RPA which allows for a hierarchy of meaningfull approximations. The simplest approximation involves a computational effort equivalent to that in a standard, discrete RPA calculation. It can be checked not only by comparing results with the more expensive calculations but also internally, through the evaluation of corrections. Several of the corrections which have been mentioned involve in fact also a very modest numerical effort.

A detailed study of the approximations was excluded

from the scope of this work, in which only simple, analytical illustrations of the features of complex RPA modes, and their implications for the structure of the approximate response function, were touched upon.

Finally, the general reaction-theoretical framework which served as starting point can be further explored, especially in the sense of making explicit the contributions of higher configurations.

I acknowledge a discussion with Arthur Kerman in which, among fancier topics, he communicated to me his thoughts on "more mundane subjects" such as projection techniques leading to the RPA and BCS approximations. One of these is the basic technique involved in the present formulation.

APPENDIX - CALCULATIONS INVOLVING THE PROJECTED BACKGROUND CONTINUUM

This appendix summarizes, for completeness, some useful techniques for the numerical calculation of quantities involving the projected background continuum. For simplicity, channel coupling effects will be ignored except for the remark following eq. (A.6). In fact, much of the appeal of the present formulation as a computational tool would be dissipated should a full-fledged treatment of channel coupling prove essential.

The first problem to be discussed is the solution of eq. (3.7)[3,4]. Here the projector p will be explicitely implemented as

$$p = 1 - \sum_n |u_n\rangle\langle u_n|$$

where the $|u_n\rangle$ constitute an orthonormal set of single-particle states spanning the resonance states. To the extent that channel coupling is ignored, the hole state is passive and eq. (3.7) is a one-body problem. Denoting as $\bar{H}$ the effective one-body hamiltonian (kinetic energy plus mean one-body potential eq. (3.7) reads

$$\left[E - \left(1 - \sum_n |u_n\rangle\langle u_n|\right) \bar{H} \left(1 - \sum_n |u_n\rangle\langle u_n|\right)\right] |K\rangle = 0 \qquad \text{(A.1)}$$

with the subsidiary condition that $|\chi\rangle$ is in p-space, i.e., $\langle u_n|\chi\rangle = 0$ for all n. Thus eq. (A.1) reduces to

$$[E-\bar{H}]|\chi\rangle = \sum_n |u_n\rangle \alpha_n \tag{A.2}$$

with $\alpha_n = \langle u_n|\bar{H}|\chi\rangle$. A formal solution of (A.2) (with outgoing wave scattering boundary conditions for definiteness) is

$$|\chi^+\rangle = |\chi_0^+\rangle + \frac{1}{E^+-\bar{H}} \sum_n |u_n\rangle \alpha_n \tag{A.3}$$

where $|\chi_0^+\rangle$ is a solution of (A.2) with the $\alpha_n = 0$. From (A.3) one gets

$$\langle u_n|\chi^+\rangle = \langle u_n|\chi_0^+\rangle + \sum_{n'} \langle u_n| \frac{1}{E^+-\bar{H}} |u_{n'}\rangle \alpha_{n'} =$$

$$= A_n + \sum_n B_{nn'} \alpha_{n'} \tag{A.4}$$

which shows that, for <u>general</u> α_n's, the overlaps $\langle u_n|\chi^+\rangle$ are <u>linear</u> functions of the α_n's. The procedure to be followed in order to obtain the correct $|\chi^+\rangle$ is thus:

a) Solve eq. (A.2) setting all $\alpha_n = 0$ to get $|\chi_0^+\rangle$. Form overlaps of this with each $|u_n\rangle$ to get the A_n, eq. (A.4).

b) Solve eq. (A.2) setting one of the $\alpha_{n'} = 1$ (other α_n's set to zero). The overlaps with the $|u_n\rangle$ will now determine the $B_{nn'}$, eq. (A.4).

c) The appropriate α_n's, given as $\alpha_n = \langle u_n|H|\chi\rangle$, are now solutions of the linear system

$$\sum_{n'} B_{nn'} \alpha_{n'} + A_n = 0 . \tag{A.5}$$

The desired function $|\chi^+\rangle$ will be a linear combination of the solutions obtained in step b) with the coefficients found from (A.5).

This procedure is a straightforward extension to many states $|u_n\rangle$ of that programmed for a single resonance in subroutine TABOO[13], which has been used in refs. (5) and (6). It should be stressed that the solution of the inhomogeneous one-body equation (A.2) is in no way more involved or time-consuming than the solution of the corresponding homogeneous equation; and also that the escape width amplitudes $\langle u_n|\bar{H}|\chi^+\rangle$ are directly obtained as solutions of the linear system (A.5), without any further numerical integrations. The corresponding single-particle widths are just

$$\Gamma_n = 2\pi \left|\langle u_n|H|\chi^+\rangle\right|^2 \tag{A.6}$$

where the states $|\chi^+\rangle$ have been δ-function normalized in energy.

With simple extension of this procedure it is also possible to estimate amplitudes involving two-body coupling to resonance-hole states (third contribution form the left in fig. 2) as well as to estimate channel coupling effects through the evaluation of two-step contributions. In the former case the equation to be solved is[5]

$$[E-\bar{H}]|\xi\rangle = \sum_n |u_n\rangle \beta_n + |\sigma\rangle \qquad \text{(A.7)}$$

where the β_n again are chosen to guarantee that $|\xi\rangle$ lies in p-space, i.e., $\langle u_n|\xi\rangle = 0$, and the genuine source term $|\sigma\rangle$ is

$$|\sigma\rangle = \sum_p |p\rangle\langle p h'|\tilde{v}|h p'\rangle$$

where p' and h' stand for the resonance and hole states within R-space, h is the final hole state and $\tilde{v}$ is the (antisymmetrized) two-body potential. When eq. (A.7) is solved with pure outgoing wave boundary conditions, it yields in fact

$$|\xi^+\rangle = \frac{1}{E^+ - \bar{H}_{pp}} H_{pR}|p'h'\rangle$$

(cf. eq. (3.5)).

Likewise, two-step channel coupling amplitudes can be estimated by solving again an inhomogeneous equation of the form (A.7) in which the source term is obtained from the action of the two-body force on a continuum-hole state (see second contribution, fig. 1).

REFERENCES

(1) J. Speth and A. van der Woude, Rep. Progr. Phys. **44**, 719 (1981) and references therein.

(2) R. de Haro, S. Krewald and J. Speth, Nucl. Phys. A388, 265 (1982). R. de Haro, Julich Report ISSN 0366-0885 (1982).

(3) A.F.R. de Toledo Piza, Tese de Livre-Docência, University of São Paulo (1967), unpublished.

(4) W.L. Wang and C.M. Shakin, Phys. Lett. 32B, 421 (1970).

(5) A.F.R. de Toledo Piza, Nucl. Phys. A184, 303 (1972).

(6) A.F.R. de Toledo Piza and E.F. Pessoa, Phys. Rev. C29, 403 (1984).

(7) A.K. Kerman, private communication (1984).

(8) M. Kawai, A.K. Kerman and K.W. McVoy, Ann. Phys. (N.Y.) 75, 156 (1973).

(9) A.F.R. de Toledo Piza, Proceedings of the IV Simpósio Brasileiro de Física Teórica, Fascículo IX, p. 37 (1972).

(10) A.K. Kerman and K.W. McVoy, Ann. Phys. (N.Y.) 122, 197 (1979).

(11) P. Ring and P. Schuck, The Nuclear Many-Body Problem, Springer-Verlag (1980), p. 318.

(12) P. Morse and H. Feshbach, Methods of Theoretical Physics, McGraw-Hill (1953), Vol. I, p. 884.

(13) A.F.R. de Toledo Piza, Computer subroutine TABOO to solve a projected inhomogeneous Schrödinger equation in an optical model continuum, Technical Report, Universidade de São Paulo (1971), unpublished.

FIGURE CAPTIONS

Fig. 1 - Particle hole scattering within the background subspace. The first contribution involves elastic scattering of the particle in the presence of a spectator hole, and the second indicates channel coupling processes.

Fig. 2 - Virtual background space component emanating from the resonance-hole component. The first two contributions involve one-body coupling between resonance-hole and background spaces, the last two involve two-body coupling. The second and fourth contributions contain channel coupling effects.

Fig. 3 - Contributions to the effective resonance-hole interaction, second term on the right hand side of eq. (3.8). The middle part of each contribution involves one of the possibilities of propagation in p-space, and coupling to the resonance-hole space goes either through one- or two-body processes. Symbols are as in figs. 1 and 2.

Fig. 4 - Simplest two-level system. The upper state is in the continuum, so that ϵ_2 is complex.

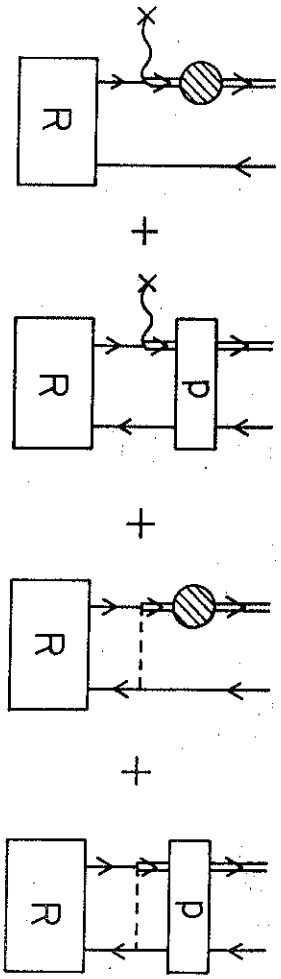

fig 2

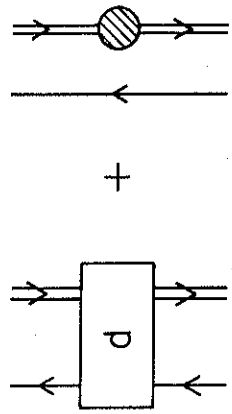

fig 1

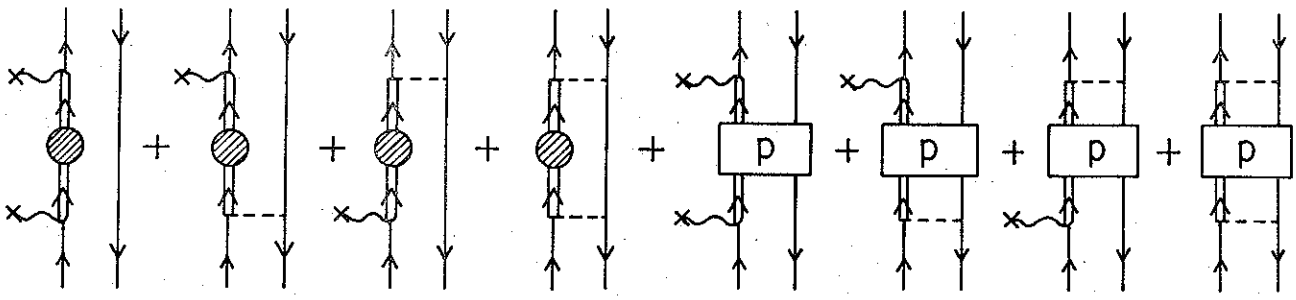

fig 3

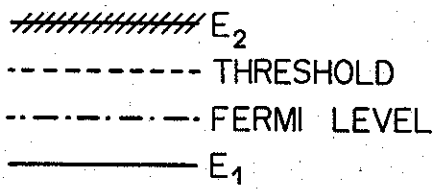

fig 4